ActiveCare drive™ Mobility

Spitfire EX 1320/1420 Mobility Scooter Owner's Manual

Rev1-03/24/15

Table of Contents

1. Preface 2
2. Safety Notices 3
3. Electromagnetic Interference (EMI) 5
Electromagnetic Interference (EMI) From Radio Wave Sources 5
Powered Scooter Electromagnetic Interference (EMI) 6
4. Parts 7
5. Operation 8
Power Switch 8
Forward & Reverse 8
Braking & Stopping 8
Horn Button 8
Seat 8
Battery gauge 8
Assembly 9
Disassembly 10
Tiller Adjustment 10
Drive Mode 11
Freewheel Mode 11
Driving Your Scooter 11
Driving Speed 11
6. Batteries & Charger 12
Specifications 13
7. Inspection & Maintenance 14
Daily Checking 14
Regular Maintenance Record 14
Battery, Fuses, Circuit Breaker and Tires 16
Maintenance 16
Storage 17
8. Troubleshooting 18
9. Specifications 20
10. Limited Warranty 21
11. Product Registration 22

Preface

Please read this owner's manual before using the mobility scooter. Improper use of the mobility scooter could result in harm, injury or traffic accidents.

This owner's manual includes operation instructions for every aspect of the mobility scooter, assembly instructions, as well as instructions for how to deal with possible accidents.

The symbols used in this manual are explained below. Read carefully, especially the parts marked with these symbols:

Warning	Improper usage could lead to death or serious injury
Caution	Improper usage could lead to injury and/or damage to your mobility scooter.
Suggestion	Follow these instructions to keep the status of the mobility scooter working well and ease your operation.

This manual includes the repair and maintenance record chart and warranty. Please keep it in a proper place or on the scooter.

If someone else uses the scooter, please be sure to give the instruction manual to him or her.

As designs change, some illustrations and pictures in the manual may not correspond to the scooter that you purchased. We reserve the right to make design modifications.

The manufacturer disclaims all responsibilities for any personal injury or property damage which may occur as a result of improper or unsafe use of its products.

Safety Notices

Become familiar with the operation of your scooter before the first use of your scooter and keep these safety notices in mind.

The same traffic rules for pedestrians apply to the use of this scooter.

1. Ride on sidewalks or pedestrian areas only.
2. At the end of a sidewalk, be aware of the cars on the road.
3. Be very cautious when driving your scooter around streets or shopping malls.
4. Always obey pedestrian traffic signals.

Practice operating your scooter

Until you are familiar with the operation of your scooter, please practice in a wide and open area, like a park. To prevent the possibility of falling off your scooter while driving, bear in mind the scooters driving motion, such as whether it is accelerating, stopping, turning, reversing, or going up or down inclines.

1. Please set the speed dial to the lowest speed initially.
2. Be sure someone is accompanying you and watches for traffic while you are driving on the road for the first time.
3. Be sure you are able to control and operate your scooter safely and confidently before changing to a higher speed.

The scooter is limited to one passenger

Do not carry any passengers on your scooter (including children). Do not use this scooter to carry or transport goods.

REGULAR USE OF YOUR SCOOTER

Please carry out daily inspections. Refer to the “Inspection & Maintenance” section of this manual for inspection procedures. Always make sure your scooter’s battery is fully charged before operating. Make sure the throttle lever is secure before turning on your scooter.

Warning!

Do not operate the scooter unless the tiller (handlebar column) is up, the teeth in the tiller adjustment bolt fit together, and the bolt is fully tightened.

Do not lean against, or pull forward on, the handlebar while mounting or dismounting from the scooter. Serious harm or injury may occur.

Do not stretch your body out on the scooter

Such action may cause you to lose your balance or be injured. Also, pay attention to loose clothing that could get tangled in the wheels.

Do not use your scooter under any of these circumstances:

- The road is muddy or has loose gravel
- The road is bumpy, narrow, or snow covered
- The road is beside a canal or waterway without fencing or hedges
- Do not drive your scooter after consuming alcohol or when fatigued
- Do not drive your scooter at night or in inclement weather

Additionally, avoid holes in the road where your wheels may get stuck. Do not make sudden turns. Do not ride on an escalator.

Do not use a mobile phone or other wireless communication device while driving

Also, do not charge a mobile phone or other electrical devices from your scooter.

Be careful driving on or near ramps and inclines

1. Be careful while driving up a steep incline. Refer to "CLIMBING ANGLE" in the "Specifications" section of this manual for details.
2. In order to avoid damage or injury to the scooter the driver should not lean against or pull on the operating lever while going up or down an incline.
3. When climbing **up** an incline, please drive slowly. You can set the speed dial to a higher speed of "5". When going **down** an incline, never reverse your scooter. Set the speed dial to the lowest speed setting "1".
4. Do not drive through any holes in the road. Refer to "MAXIMUM GROUND CLEARANCE" in the "Specifications" section for details.
5. Do not pass through water covering the road unless the water is less than 1 inch deep.
6. Please drive slowly on roads with drops or dips.
7. Do not make sudden turns while drive on gravel roads or ramps.

Warning!
Do not set the scooter in freewheel mode when driving on an incline or decline.

Maximum User Weight Limit

Refer to "MAXIMUM LOAD WEIGHT" in Section 9 "SPECIFICATIONS" for details. Overloading your scooter will lead to damage to, or malfunction of, your scooter. This could cause the scooter to become a safety hazard. The warranty does not cover damage from overloading.

LABELING OF YOUR SCOOTER

Please read all the labeling on the scooter before driving it. For your future reference, do not remove them.

Electromagnetic Interference (EMI)

This portion of the manual will provide the user with basic information about the problems with EMI (electromagnetic interference), protective measures can be used to either lessen the possibility of exposure or to minimize the degree of exposure; this section also shows some conditions that unexpected or erratic movements may cause.

> **Caution**
> It is very important that you read this information regarding the possible effects of electromagnetic interference on your electric ActiveCare mobility scooter.

ELECTROMAGNETIC INTERFERENCE (EMI) FROM RADIO WAVE SOURCES

Mobility scooters may be susceptible to electromagnetic interference (EMI), which is interfering electromagnetic energy (EM) emitted from sources such as radio stations, TV stations, amateur radio (HAM) transmitters, two-way radios, and cellular phones. The interference (from radio wave sources) can cause the mobility scooter to release its brakes, move by itself, or move in unintended directions. It can also permanently damage the mobility scooter's control system. The intensity of the interfering EM energy can be measured in volts per meter (V/m). Each mobility scooter can resist EMI up to a certain intensity level. The higher the immunity level the greater the protection. At this time, current technology is capable of achieving at least a 20 V/m immunity level, which would provide useful protection from the more common sources of radiated EMI. This mobility scooter model as shipped, with no further modification, has an immunity level of 20 V/m without any accessories.

There are a number of sources of relatively intense electromagnetic fields in the everyday environment. Some of these sources are obvious and easy to avoid. Others are not apparent and exposure is unavoidable. However, we believe that by following the warning listed below, your risk to EMI will be minimized.

The sources of radiated EMI can be broadly classified into three types:

1. Hand-held portable transceivers (transmitter-receivers with the antenna mounted directly on the transmitting unit). Examples include: citizens band (CB) or hand held radios, (security, fire, and police transceivers), cellular telephones and other personal communication devices.
   NOTE: Some cellular telephones transmit a signal while they are ON but not being used.
2. Medium-range mobile transceivers, such as those used in police cars, fire trucks, ambulances and taxis usually have the antenna mounted on the outside of the scooter.
3. Long-range transmitters and transceivers, such as commercial broadcast transmitters (radio and TV broadcast antenna towers) and amateur (HAM) radios.

NOTE: Other types of hand-held devices, such as cordless phones, laptop computers, AM/FM radios, TV sets, CD player, and cassette players, and small appliances, such as electric shavers and hair dryers, are not likely to cause EMI problems to your mobility scooter.

MOBILITY SCOOTER ELECTROMAGNETIC INTERFERENCE (EMI)

EM energy rapidly becomes more intense as one moves closer to a transmitting antenna (source). The EM fields from hand-held radio wave sources (transceivers) are of special concern. It is possible to unintentionally bring high levels of EM energy very close to the mobility scooter's control system while using these devices; this can affect your scooter's movement and braking. Therefore, the warnings listed below are recommended to prevent possible interference with the control system of a mobility scooter.

Warning!

Electromagnetic interference (EMI) from sources such as radio and TV stations, amateur radio (HAM) transmitters, two-way radios, and cellular phones can affect mobility scooters. Following the warnings listed below should reduce the chance of unintended brake release or mobility scooter movement which could result in serious injuries.

1. Do not operate hand-held transceivers-receivers, such as citizens band (CB) radios, or turn ON personal communication devices, such as cellular phones, while the mobility scooters turned ON.
2. Be aware of nearby transmitters, such as radio or TV stations, and try to avoid getting close to them.
3. If unintended movement or brake release occurs, turn the mobility scooter OFF as soon as it is safe.
4. Be aware that adding accessories or components, or modifying the mobility scooter, may make it more susceptible to EMI.
5. Report all incidents of unintended movement or brake release to ActiveCare Medical, and note whether there were sources of EMI nearby.

Parts

SPITFIRE EX

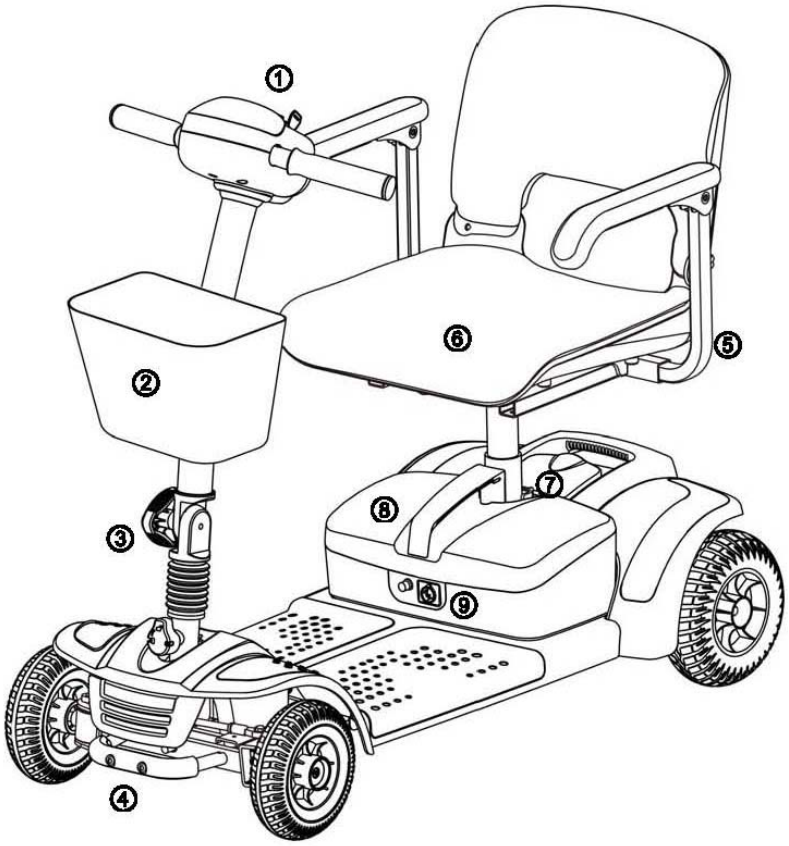

1. Control panel
2. Basket
3. Tiller adjustment bolt
4. Carrying handle
5. Removable flip-up arm rest
6. Detachable swivel seat with fold-down back
7. Connecting device
8. Battery pack
9. Charger socket
10. Tiller lock
11. Battery gauge
12. Horn button
13. Speed dial
14. Throttle lever
15. Diagnostic light
16. Key switch
17. Freewheel mode lever
18. Anti-tip wheel

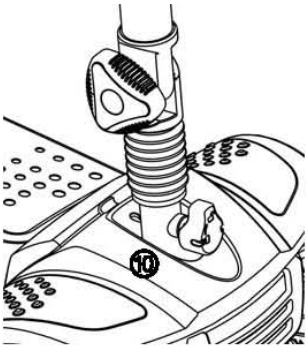

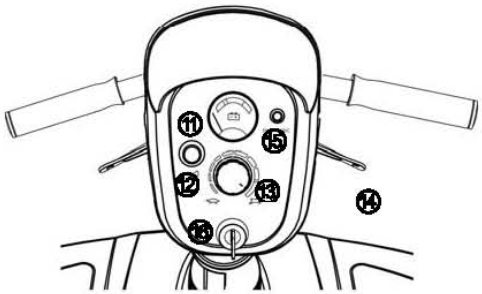

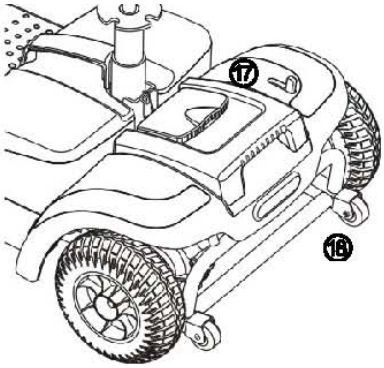

Operation

POWER SWITCH

Turn the key switch to power ON or OFF

FORWARD AND REVERSE

1. Push the throttle lever forward with your right thumb and the scooter will move forward.
2. Push the throttle lever forward with your left thumb and the scooter will move backward.
3. The horn will beep when the scooter is in reverse.

BRAKING & STOPPING

To activate the electromagnetic brake, release the throttle lever completely. The brake will be activated and the scooter will come to a stop. When parking, park only on a flat surface and turn the key switch to [OFF]. Then pull out the key (only after stopping).

> **Caution**
> Stopping distance will vary with your forward/reverse speed. Please begin braking as early as possible. When parking your scooter, be sure to park on a flat ground and then turn the power to “OFF”.

HORN BUTTON

The warning horn will be activated while holding down the button.

SEAT

The seat can be turned 180°. Pull the swivel seat lever to rotate the seat. The seat has 3 height adjustments. After adjusting the height to the desired seat position, secure the fixed nut.

> **Caution**
> Be sure the seat is in the forward position and locked before driving.

BATTERY GAUGE

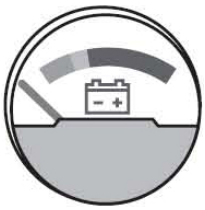

When the key is switched “ON”, the battery gauge will display the battery power capacity by indicating red, yellow and green areas respectively.

The green area indicates a full charge from the battery. Red area indicates low power.

The remaining power indicated by the battery gauge will vary based on the actual driving time and how you drive. Repeated starting, stopping or climbing will consume the power more quickly.

> **Suggestion**
> 1. It is recommended that you charge the battery immediately when the battery gauge is in the red area.
> 2. After charging or replacing a new battery, drive the scooter for 2-3 minutes to make sure the battery capacity is enough.
> 3. In the wintertime, the battery may respond more slowly and the distance you can

travel may also be shortened.

4. When driving on an incline, the battery gauge light might move from green to red, this is a normal phenomenon, please do not worry.
5. Even if the battery is used properly, it is natural that the battery capability will decay as time passes. This results in a shortening of travel distance compared to a brand new battery. Therefore, when you find the travel distance is about only 50% of a brand new battery's traveling distance, it is time for a replacement battery. Please go to your dealer and ask a new battery. If you continue to use the old battery when its capacity has decreased, it could lead to a decrease in travel distance.
6. Travel distances will be shortened when driving frequently on an incline or slope, as this leads to a larger consumption of the power.

ASSEMBLY

No tools are required to disassemble or assemble your scooter.

1. Place the freewheel mode lever in the drive position.
2. Set the rear section in the up position and make sure the hook for the front section is connected to the axle of the rear section. (See Fig. 1)
3. Put down the front and rear sections until the scooter is level. (See Fig. 2)
4. Set down the battery pack on the scooter, and make sure it is in the correct position.
5. Set down the seat on the seat post until the swivel lock engages and you hear a click.
6. Turn key switch to "ON". Make sure battery gauge indicates sufficient power.

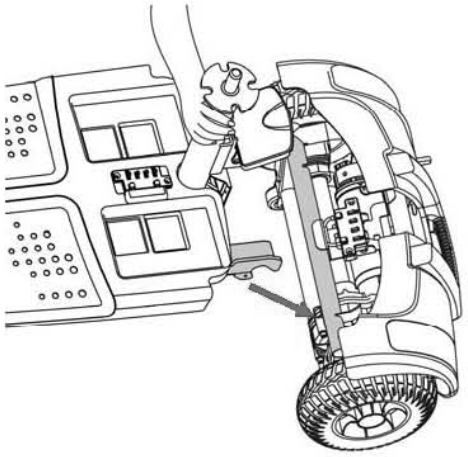

Fig. 1

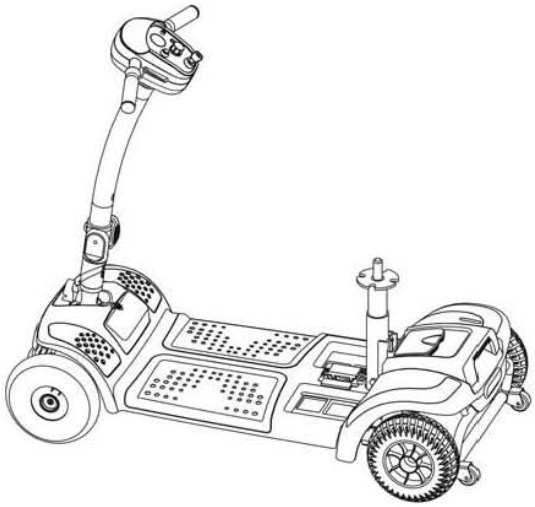

Fig. 2

Caution

- Make sure you connect all pieces together properly.
- Turn off all power to your scooter and remove key from key switch to prevent accident before disassembly.
- Pay careful attention while assembling to avoid finger injuries
- Ensure the front and rear sections are set in the right position before driving.

DISASSEMBLY

You can disassemble the scooter into five pieces: the seat, the front section, the basket, the

battery pack, and the rear section.

Always disassemble or assemble your scooter on a level, dry surface with sufficient space for you to work and move around the scooter. Keep in mind that the disassembled sections of the scooter take up more floor space than the assembled scooter.

> **Caution**
> To avoid personal injury, ask for assistance, if necessary, while disassembling or assembling your scooter.

1. Make sure the tiller is raised before reassembling the scooter.
2. Turn key switch to “OFF”.
3. Place the free wheel mode lever in the drive position.
4. Pull upward on the swivel-release lever to remove the seat from seat post.
5. Pick up the battery pack and remove it from the scooter.
6. Pull the connecting device upward to the rear section and stand upright.
7. Take off the front section with both hands and lower the shaft.

TILLER ADJUSTMENT

1. To adjust the tiller angle, turn the knob counter-clockwise to unscrew the bolt.
2. Adjust the tiller angel to the desired position; turn the knob clockwise to tighten the bolt.

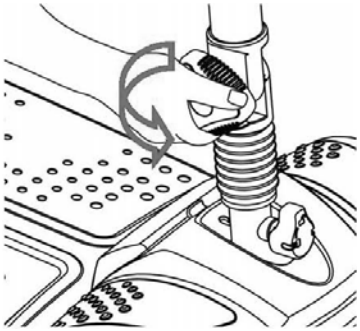

DRIVE MODE

Push the freewheel mode lever on the scooter towards the rear direction, and the scooter will be driven by the motor.

FREEWHEEL MODE

Push the freewheel mode lever on the scooter forward and the scooter can be pushed by hand.

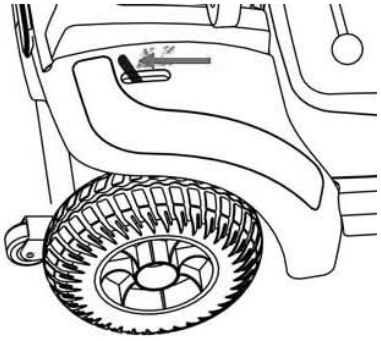

Drive Mode

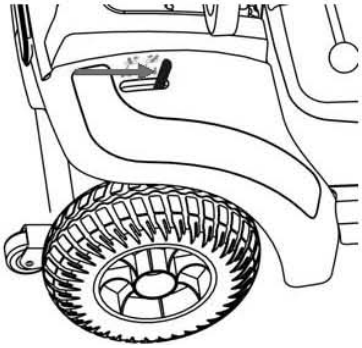

Freewheel Mode

DRIVING YOUR SCOOTER

1. Turn the key switch to “ON”.
2. Check battery gauge to see whether there is enough power for your trips. If you have

doubts about the remaining power, please charge the battery before departure.

3. Set to the proper speed by the speed dial.
4. Be sure the throttle lever is functioning properly.
5. Make sure the electromagnetic brake is working properly.
6. Make sure it is safe before driving on the street.

Caution

1. Do not push the right hand & left hand throttle levers simultaneously; this might lead to losing control of your scooter.
2. Do not set to the highest speed while driving indoors.
3. Do not adjust the speed dial while driving, the sudden change in speed may endanger you and cause your scooter to malfunction.
4. Do not place magnetic devices near the area of the operation handle; this could affect the safe operation of your scooter.
5. While reversing the scooter, be aware of people or objects behind you.

DRIVING SPEED

The driving speed of the scooter is set via the speed control knob located on the control panel. When the knob is turned to a position, the scooter will drive only at the speed indicated by the knob. The scooter will travel faster the farther the knob is turned clockwise. To reduce the scooter's travel speed, turn the knob back counter-clockwise.

Batteries & Charger

CHARGING THE BATTERY

Be sure to follow the procedures below accordingly.

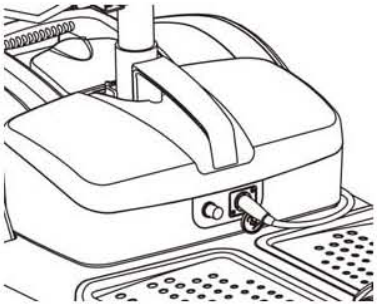

1. Turn the scooter key switch to “OFF”.
2. Open the charging socket cap on the scooter’s cover then connect the charger’s plug to the charging socket.
3. Plug the power cable into your power outlet.
4. The charger’s LED light will be orange at the beginning of a charge. The charging duration is at least 6-8 hours (but this will vary), based on the status of the battery and temperature.
5. The orange LED will turn to green when the charging is complete.
6. Disconnect the cord and remove the round plug from the charge socket.

Suggestion

1. Do not disconnect the charger cord if charging is not complete. The battery life will be shortened if the battery is repeatedly used without being fully charged. Therefore, be sure to charge the battery fully every time.
2. Continue to charge until the green LED light is on. NEVER stop charging before it is complete.
3. While finishing charging, the electric power will still slowly discharge if the cord is not disconnected.
4. Your scooter should be charged at least every month to keep the battery at full status, even when not being used.
5. Charging time will be affected by the ambient temperature so it takes longer in the wintertime.

Caution

Please follow the rules below to avoid accidents while charging.

1. Please use the ActiveCare scooter’s charger only and charge the battery completely every time. The battery might be damaged if you use a charger that is not compatible.
2. Never disassemble or modify the charger.
3. Do not charge in a space that is directly exposed to the sunlight. Do not charge in a space where it is humid or subject to rainfall or dew.
4. Do not cover the scooter with any waterproof cloth or other objects while charging.
5. Do not charge in temperatures lower than 14°F or higher than 122°F, the charger may not work properly and the battery may be damaged

Warning!

1. Keep away from flammable objects while charging, as it may lead to fire or explosion of the batteries.
2. As the battery may produce hydrogen, do not smoke while charging. Always charge your battery in a well-ventilated space.
3. Never connect or disconnect the plug or cord with wet hands while charging. Do not connect or disconnect the plug or cord when they are wet, this may lead to an electric shock.

BATTERY SPECIFICATIONS

12AH

Type	Deep-cycle (Sealed Lead Acid Battery)
Size	6” × 4” × 3.7” (L × W × H)
Voltage	12V
Amperage	12Ah

21AH

Type	Deep-cycle (Sealed Lead Acid Battery)
Size	7” × 3” × 6.5” (L × W × H)
Voltage	12V
Amperage	21Ah

Do not expose the battery to temperatures lower than 14°F or higher than 122°F when charging or storing the scooter. Exceeding the specified temperature ranges can lead to freezing or overheating of the battery. This will possibly damage the batteries and shorten their lifetime.

The battery used on your scooter is sealed lead acid, which is maintenance-free, so it is not needed to change or refill the battery liquid.

Suggestion

1. Do not use the battery to charge any other equipment.
2. Battery capability will vary with outside conditions; the driving distances will be shorter in the winter.
3. If the scooter is not to be used for a long time, please charge the battery every three months.
4. Replace both batteries at the same time.

Inspection & Maintenance

DAILY CHECKING

Check the following items before driving. If you find anything abnormal, go to or call your scooter dealer for further inspection before using it.

Item	What to Look For
Handle Bar	Is it tight? Can it be turned left or right smoothly?
Speed Dial	Can it be adjusted freely and function well?
Throttle Lever	Does the scooter move when the lever is engaged? Does the scooter stop when the lever released completely?
Motor	Is there any abnormal noise from the motor? Does the electromagnetic brake work properly?
Freewheel Mode Lever	Does the free wheel mode lever work properly?
Battery Gauge	Does the light come on when switched “ON”? Is the remaining power enough for your trip?
Horn Button	Does the horn work?
Turn signal	Does the turn signal work?
Seat	Is the seat on properly? Can the seat be turned smoothly?
Tires	Are there any cracks or other damage to the tires? Check the tread on the tires.
Other	Is there any abnormal noise?

Caution
Go to your dealer for inspection and maintenance if you find anything wrong.

REGULAR MAINTENANCE RECORD

To make sure your scooter is in good condition, go to your dealer regularly for maintenance and record it accordingly every six months after purchasing (fee required).

Suggestion
Even if you don’t use the scooter for a long time, the scooter should still be maintained regularly.

I–Inspection A - Adjustment ▯ - Repair × - Replacement

T – Tightening C - Cleanse L - Add Oil

Item/Period		1 mo.	6 mo.	12 mo.	18 mo.	24 mo.	30 mo.
Control Panel	Forward/Reverse of speed lever						
	The function of switches						
	Connection of socket/plug is good						
Motor	Operation and noise						
	Function of electromagnetic brakes						
	Connection of socket/plug is good						
Transaxle	Any oil leakage from Transaxle						
Battery	Looseness or corrosion on terminals						
	Connection of socket/plug is good						
	Any broken on electrical cord						
Charger	Charging function and LED light						
	Any damage on socket/plug/cord						
Seat	High adjustment bolt damaged						
	Seat post looseness						
Tiller	Right/left turn of tiller						
	Adjustment of tiller angle						
Tire	Crack or damage of tire surface						
	Tread depth enough or not						
	Abnormal wearing						
Rim	Tightness of bolts and nuts						
	Wear or deformation around tires						
Shock Absorber	Tightness of bolts and nuts						
	Damage to shock absorbers						
Inspector	Checked by						
	Checking date						

BATTERY, FUSES, CIRCUIT BREAKER AND TIRES

Battery

Refer to “BATTERIES & CHARGER” Section.

Fuse

There are two fuses on your scooter. One is located inside the operation panel; another is in the battery pack. If the key switch is “ON” and the battery gauge does not move, check the fuse.

> **Suggestion**
> Ask for help from your dealer for inspecting or replacing the fuses, (since battery pack has to be disassembled first for replacement of fuses).

Circuit Breaker

There is one button for the circuit breaker (located on the battery pack). If the power switch is “ON” and the battery gauge does is not move, it is possible an electric current has overloaded the scooter. Reset the circuit breaker by pressing the button.

Tires

The condition of the tires depends on how you drive and use your scooter. Please check the tread depth regularly. Replace the tires when the tread depth is less than 0.5 mm. Regularly inspect your scooter’s tires for signs of wear.

> **Caution**
> When tread depth is below 0.5mm, it can easily lead to slippage, making braking distances longer. Therefore, replace the tires as early as possible.

MAINTENANCE

1. You must maintain the scooter frequently if you drive on grass, sand, or gravel roads.
2. Do not use water, oil or other chemical solutions to clean your scooter. Be sure NOT to spray the scooter with water to prevent damaging the electronic components and printed circuit board. Please clean the scooter by wiping it with either a dry or moist cloth.
3. Please take the scooter to authorized dealers for repairs and adjustments. Improper adjustments could lead to accidents and scooter malfunction.
4. Please use soft and dry cloths to keep your scooter tidy. Please use moderate or mild detergent to clean the scooter.

> **Caution**
> When conducting maintenance of your scooter, please turn the key switch “OFF” and remove the charger cord.

STORAGE

When storing your scooter:

- Make sure the seat is set in the “Forward” position
- Make sure the key switch is turned to “OFF”

> **Suggestion**
> Please store the scooter in a location where it is out of direct sunlight, rain, or dew. When storing for long periods of time, please charge the battery every 3 months. For further details, inquire with your dealer.

Troubleshooting

This table is only a guide to aid you in getting your scooter operating, should you have any problems. If you are unable to get your scooter operating, please contact your Authorized Service Center.

Table 1: Basic Troubleshooting

Symptom	Possible Cause	Solution
Scooter does not move	1. Key switch is not “ON”	1. Turn key switch to “ON”.
	2. Main circuit breaker tripped	2. Reset circuit breaker in trunk area.
	3. Brake release lever in ‘Freewheel Mode’	3. Place lever to ‘Drive Mode’.
	4. Charger connected to outlet	4. Disconnect charger.
	5. Battery power low	5. Recharge battery.
	6. Scooter shuts down to conserve battery	6. Cycle key switch “OFF”, then “ON”.
	7. Controller error	7. Check diagnostic light for Flash Code (See Table 2 to get solution).
Scooter feels wobbly when driven	1. Seat is loose	1. Check seat for loose hardware or damage. Ensure seat in locked position.
	2. Bearing in tiller worn	2. Replace bearings.
Range less than expected	1. Charging too infrequently	1. Charge scooter more often.
	2. Defective or worn out battery	2. Load test batteries. If necessary, replace.
	3. Cold weather reduces battery life	3. Allow batteries to reach room temperature and then fully recharge.
	4. Defective charger	4. Contact your Authorized Service Center.
Erratic behavior when engager is operated	1. Faulty engager	1. Contact your Authorized Service Center.
Brake squeals	1. Dirt in brake pad	1. Blow dirt out with air pressure hose.
Brake release lever sticks	1. Rust and corrosion	1. Spray ball detent area with lubrication oil.
Stiffness in steering	1. Possible grime build-up	1. Lubrication rod end joints.

The diagnostic flash codes for your scooter are designed to help you perform basic troubleshooting quickly and easily. A diagnostic flash code flashes from the diagnostic light in the event one of the conditions listed below develops.

Table 2: Scooter Controller Internal Diagnostics

Flash code	Possible Cause	Solution
1	The battery needs charging or there is a bad connection to the battery.	Check the connections to the battery. If the connections are good, try charging the battery.
2	There is a bad connection to the motor.	Check all connections between the motor and the controller.
3	The motor has a short circuit to a battery connection.	Please contact your Authorized Service Center.
4	Not available	
5	Not available	
6	The controller is being inhibited from driving.	Check the battery charger connector. Remove the battery charger from the scooter.
7	A speed control lever fault is indication.	Make sure that the speed control lever is in the rest position before switching on the scooter.
8	A controller fault is indicated.	Make sure that all connections are secure.
9	The parking brake has a bad connection.	Check the parking brake and motor connections. Make sure the controller connections are secure.
10	Excessive voltage has been applied to the controller.	Check the battery connections. This is usually caused by a poor battery connection.

Specifications

Model	Spitfire EX 1420	Spitfire EX 1320
Max. Weight Capacity	300 lbs.	300 lbs.
Maximum Speed	5 mph	5 mph
Estimated Range	9 miles (12AH) 15 miles (21AH)	9 miles (12AH) 15 miles (21AH)
Maximum Grade/Incline	6°	6°
Turning Radius	50"	46"
Ground Clearance	3"	3"
Overall Dimensions		
Length	42"	39"
Width	20"	20"
Height	36"	36"
Seat Dimensions		
Width	17"	17"
Depth	16"	16"
Back	14"	14"
Armrest to Seat	7"	7"
Power		
Motor	24V x 270W x 4700rpm	24V x 270W x 4700rpm
Controller	Dynamic R50A	Dynamic R50A
Batteries	Two DC 12V x 12AH Or Two DC 12V x 21AH	Two DC 12V x 12AH Or Two DC 12V x 21AH
Battery Charger	2 Amp, Offboard	2 Amp, Offboard
Brakes	Electromagnetic	Electromagnetic
Freewheel Mode	Yes	Yes
Tires (Foam-filled)		
Front	7.5" x 2"	7.5" x 2"
Rear	8.5" x 3"	8.5" x 3"
Suspension	N/A	N/A
Weights		
Weight without Batteries	92 lbs.	85 lbs.
Weight with Batteries	111 lbs. (12AH) | 121 lbs. (21AH)	104 lbs. (12AH) | 114 lbs. (21AH)
Heaviest piece weight (front section)	40 lbs.	33.5 lbs.

REMARK: Drive reserves the right to modify the specifications if necessary. The final specifications are subject to the individual scooter your purchase from your dealer.

User's weight, road conditions, battery charge, etc. will influence performance.

LIMITED LIFETIME WARRANTY
POWER WHEELCHAIRS & MOBILITY SCOOTERS

FOR THE WARRANTY PERIODS LISTED BELOW, BEGINNING AT THE DATE OF ORIGINAL PURCHASE, DRIVE MEDICAL WILL REPAIR OR REPLACE, AT ITS OPTION TO THE ORIGINAL PURCHASER, FREE OF CHARGE, ANY OF THE FOLLOWING PARTS FOUND UPON EXAMINATION BY AN AUTHORIZED REPRESENTATIVE OF DRIVE MEDICAL TO BE DEFECTIVE IN MATERIALS AND/OR WORKMANSHIP. THE WARRANTIES CONTAINED HEREIN EXTEND AND APPLY ONLY TO THE ORIGINAL PURCHASER.

LIMITED LIFETIME
- Main frame
- Seat post
- Platform
- Frame welds

14 MONTHS
- Charger assembly
- Controller
- Throttle
- Joystick
- PC board
- Electrical harness
- Brakes (electronic function ONLY)
- Motor/gearbox assembly

6 MONTHS
- Batteries are covered by a separate six (6) month warranty provided by the battery manufacturer.

The following items are warranted to be free of defects in workmanship and materials at the time of delivery. If the following items are found to be defective or damaged immediately after the product is removed from the box, Drive Medical will repair or replace, at its option to the original purchaser, free of charge, the following items:

- Plastic shrouds and footrests
- Motor brushes
- Upholstery and seating
- Armrest pads
- Tires and tubes
- Anti-tip wheels
- Floor mats
- Swing arm
- Plastic connections
- Fuses/Bulbs
- Metal connection pins, hardware, nuts, bolts & star knobs
- Bearings and bushings
- Brake pads
- Plastic components, excluding body
- Front rigging mounting brackets

ADDITIONAL COMPONENTS
Items not mentioned or listed are covered at the discretion of Drive Medical. Any accessories, standard or optional, supplied by Drive Medical, are covered for a period of one year from the date of purchase with the particular unit.

RECONDITIONED UNITS WARRANTY
All reconditioned units are covered by a 90-day warranty from Drive Medical effective from the date of purchase.

REPLACEMENT PARTS WARRANTY
Parts that are supplied by Drive Medical as replacements to warrantied parts will be warranted for a period of time equal to the remainder of the original part's warranty period.

WARRANTY EXCLUSIONS
- Plastic shrouds and footrests.
- Upholstery and seating.
- Tires and tubes.
- Brake pads.
- Fuses.
- Motor brushes.
- Circumstances beyond the control of Drive Medical.
- Labor, service calls, shipping and other charges incurred for repair of the product, unless specifically authorized by Drive Medical, Inc.
- Repairs and/or modifications made to any part without specific consent from Drive Medical.

Exclusions also include components with damage caused by:
- Contamination.
- Abuse, misuse, accident or negligence.
- Battery fluid spillage or leakage.
- Batteries not properly maintained by recommended charging and storage procedures.
- Commercial use, or use other than normal.
- Improper operation, maintenance or storage.
- Exceeding the specified weight capacity of the unit.
- Acts of Nature, such as lightning strike, earthquake, etc.
- Accessories other that those supplied or approved by Drive Medical.

SERVICE CHECKS AND WARRANTY SERVICE
Warranty service must be performed by an authorized Drive Medical provider. Do not return faulty parts to Drive Medical without prior written authorization. All transportation costs and shipping damage incurred while submitting parts for repair or replacement are the responsibility of Drive Medical.

Failure to follow the instructions, warnings and notes in the owner's manual and those located on your Drive Medical product can result in personal injury or product damage and will void Drive Medical's product warranty.

There is no other express warranty.

IMPLIED WARRANTIES
Implied warranties, including those of merchantability and fitness for a particular purpose, are limited to one (1) year from the date of original purchase and to the extent permitted by law. Any and all other implied warranties are excluded. This is the exclusive remedy. Liabilities for incidental, punitive, special and consequential damages under any and all warranties are excluded.

Some states do not allow limitations on how long an implied warranty lasts or do not allow the exclusion or limitation of incidental, punitive, special and consequential damages. The above limitation or exclusion may not apply to you.

This warranty gives you specific rights and you may also have other rights which vary from state to state.

Product Registration

Thank you for purchasing a Drive power mobility product!

Your Drive product will provide you years of dependable service and mobility ease. To validate your product's warranty, you must complete this form and return it to Drive Medical immediately.

Please print or type.

Your Name

Your Address

City State Zip

Phone Number ( ) -

E-mail Address

Product Information

Model

Date Purchased / / Month Day Year

Serial Number

Dealer Purchased From

Dealer Address

City State Zip

Phone Number ( ) -

Place
Stamp
Here

Drive Medical Product Registration

99 Seaview Blvd.

Port Washington, NY 11050

Fold Here ---------- Fold Here ----------Fold Here

Seal This Side